Technical data for IN 830

Table of content

Specifications for model IN 832, IN 834 and IN 836 2

Combinations of heating zones 3

Dimensions for IN 832R on legs 4

Dimensions for IN 834R on legs 5

Dimensions for IN 836R on legs 6

Dimensions for IN 832R on height adjustable stand 7

Dimensions for IN 836R on height adjustable stand 8

Dimensions for IN 836R on height adjustable stand 9

Installation data for IN 832 and IN 834 on legs 10

Installation data for IN 836 on legs 11

Installation data for IN 832 and IN 834 on a height adjustable stand 12

Installation data for IN 836 on a height adjustable stand 13

Accessory: Shelf and floor mounting 14

Accessory: Handrail and sea rail 15

Electric connection for IN 830 16

We reserve our right to technical alterations with reservations against misprints.

Jøni A/S · C.F. Tietgens Boulevard 28 DK-5220 Odense SØ · Phone +45 65 97 48 15 · Fax +45 65 97 57 47

Technical data for IN 830

Dokument nr. 100000024748-000-01 EN Side 2/156

Specifications for model IN 832, IN 834 and IN 836

2, 4, or 6 cooking zones
6 mm thick ceramic top plate
Ø 270 mm cooking zones
Power pr. zone:
3x400V+PE: 5 kW pr zone
3x230V+PE: IN 832 5 kW pr. zone
IN 834 5 kW but max. 10,5 kW for all four zones on the same time
IN 836 5 kW on two zones , 5 kW for the four last zones but max 10,5 kW for all four zones at simultane use.
3x440V+PE: 5 kW pr zone
Heat regulation: Stepless by knob.
Ingress protection class: IPX5
Disconnector switch on the range

Frame

Fixed frame with manual adjustable height between 850 - 900mm
Shelf under the range follows the height of the range:
.....-At a height of 850mm the shelf is 250 mm from the floor.
.....-At a height of 900mm the shelf is 300 mm from the floor
Electric heigh adjustable frame with a working height between 800-1000mm

Accessory

Sea rail
Hand rail
Shelf to the left, to the right or on both sides
Angles for securing
Extra grease filter
Scraper

	Number of cooking zones	3x230V+PE		3x400V+PE		3x440V+PE		Leak-cur-rent
	Round	Rated power [kW]	Current consump-tion [$L_1/L_2/L_3$]	Rated power [kW]	Current consump-tion [$L_1/L_2/L_3$]	Rated power [kW]	Current consump-tion [$L_1/L_2/L_3$]	mA
IN 832R	2	10,0	3x25	10	3x14	10	3x13	≤30
IN 834R	4	10,5	3x26	20	3x28	20	3x26	≤30
IN 836R	6	20,5	3x51	30	3x43	30	3x39	≤60

We reserve our right to technical alterations with reservations against misprints.

Jøni A/S · C.F. Tietgens Boulevard 28 DK-5220 Odense SØ · Phone +45 65 97 48 15 · Fax +45 65 97 57 47

Technical data for IN 830

Dokument nr. 10000002474 8-000-01 EN Side 3/16

Combination of heating zones

IN 832R

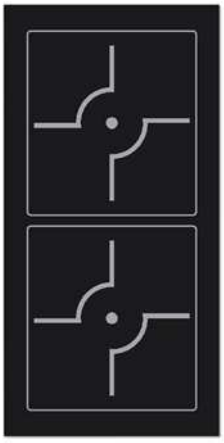

IN 834R

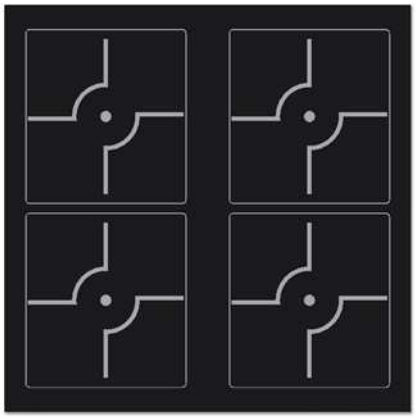

IN 836R

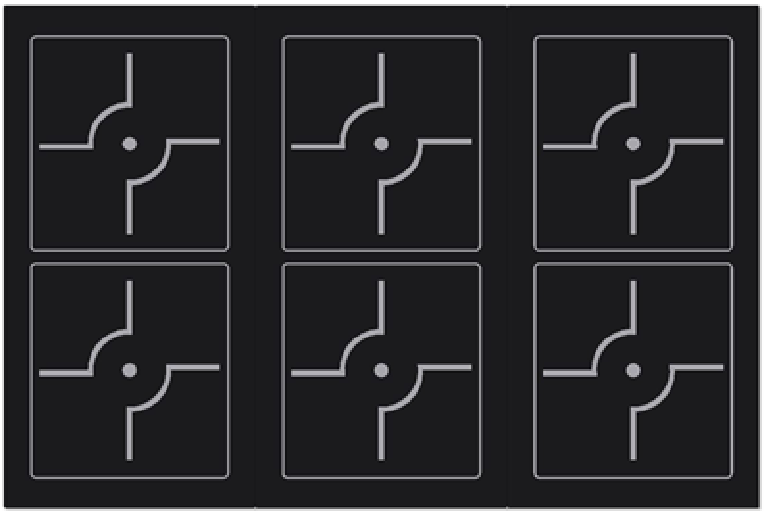

We reserve our right to technical alterations with reservations against misprints.

Jøni A/S · C.F. Tietgens Boulevard 28 DK-5220 Odense SØ · Phone +45 65 97 48 15 · Fax +45 65 97 57 47

Technical data for IN 830

Dimensions for IN 832R on legs

The shelf under the range is 300mm above the floor on a 900 mm heigh range and 250mm above the floor on a 850 mm heigh range.

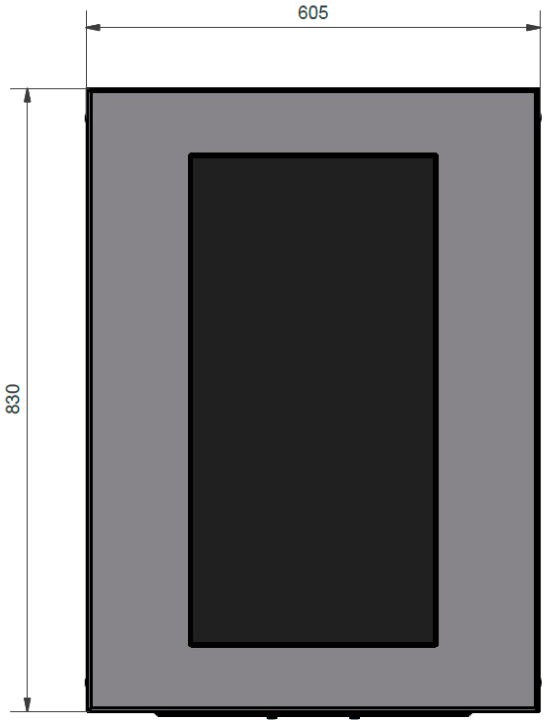

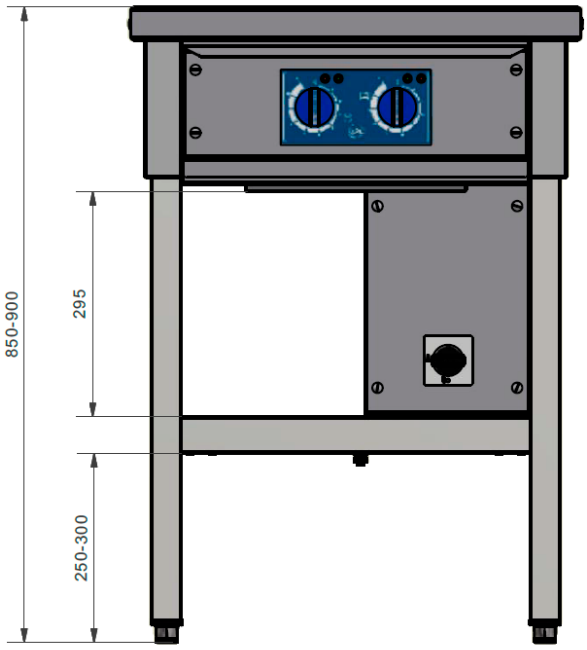

For usage and service purposes a 830 mm minimum clearance is required at the front of the range

Jøni A/S · C.F. Tietgens Boulevard 28 DK-5220 Odense SØ · Phone +45 65 97 48 15 · Fax +45 65 97 57 47

Technical data for IN 830

Dimensions for 834R on legs

The shelf under the range is 300mm above the floor on a 900 mm heigh range and 250mm above the floor on a 850 mm heigh range.

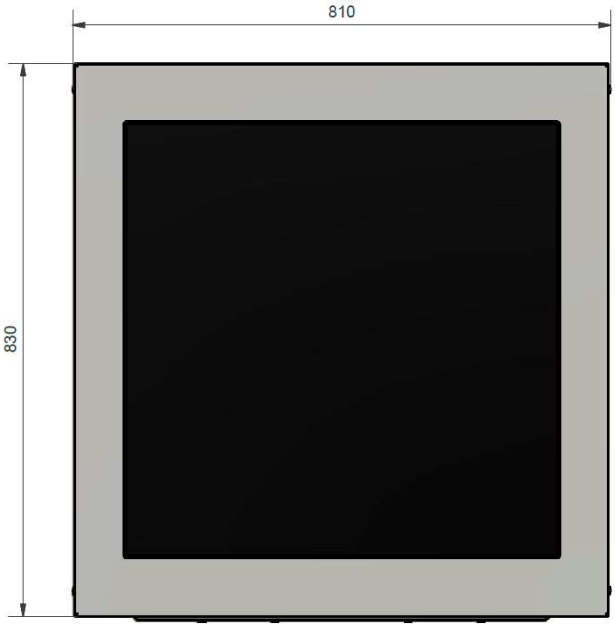

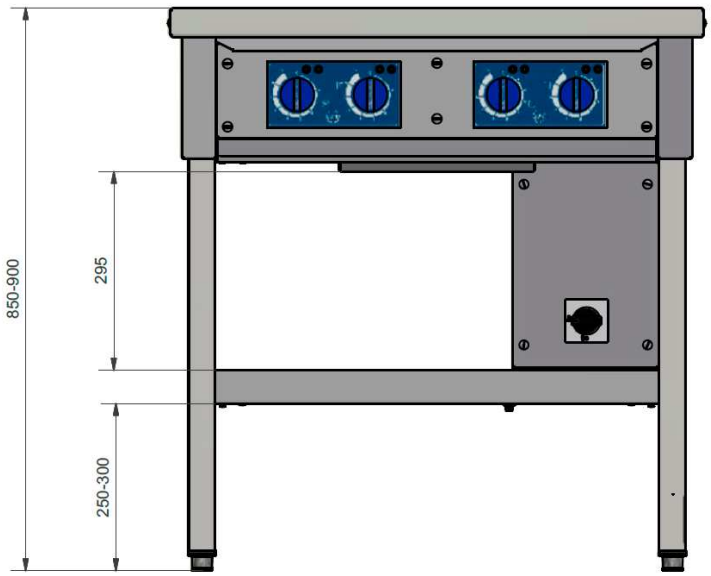

For usage and service purposes a 830 mm minimum clearance is required at the front of the range

We reserve our right to technical alterations with reservations against misprints.

Jøni A/S · C.F. Tietgens Boulevard 28 DK-5220 Odense SØ · Phone +45 65 97 48 15 · Fax +45 65 97 57 47

Technical data for IN 830

Dimensions for 836R on legs

The shelf under the range is 300mm above the floor on a 900 mm heigh range and 250mm above the floor on a 850 mm heigh range.

Dokument nr. 100000024748-000-01 EN Side 6/156

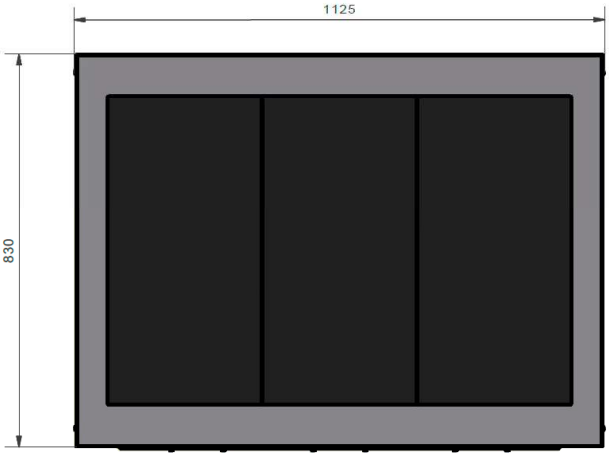

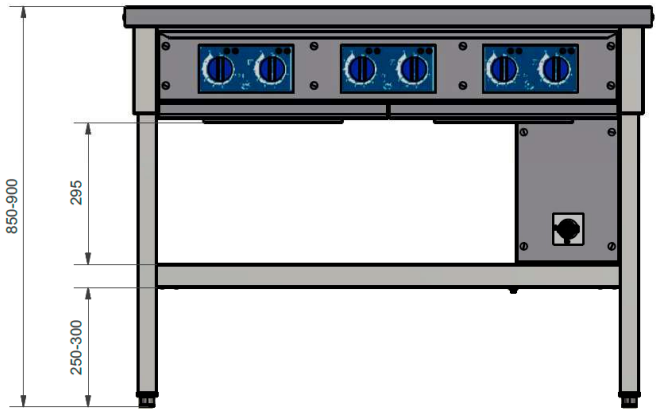

For usage and service purposes a 830 mm minimum clearance is required at the front of the range

Jøni A/S · C.F. Tietgens Boulevard 28 DK-5220 Odense SØ · Phone +45 65 97 48 15 · Fax +45 65 97 57 47

Technical data for IN 830

Dimensions for IN 832R with heigh adjustable stand

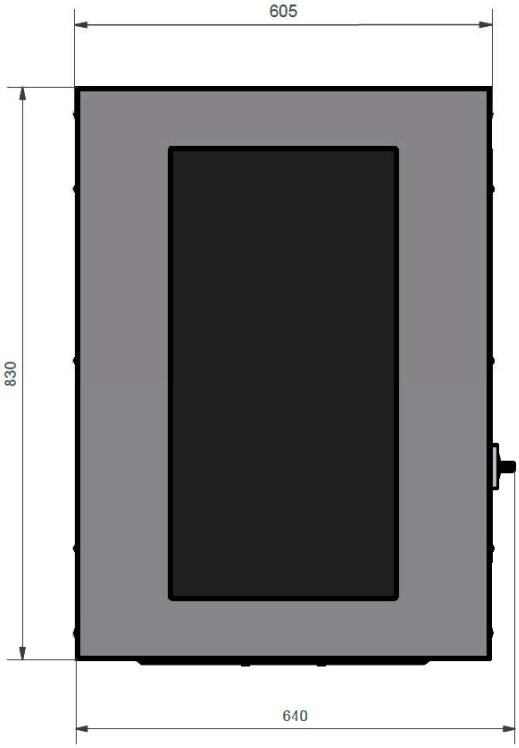

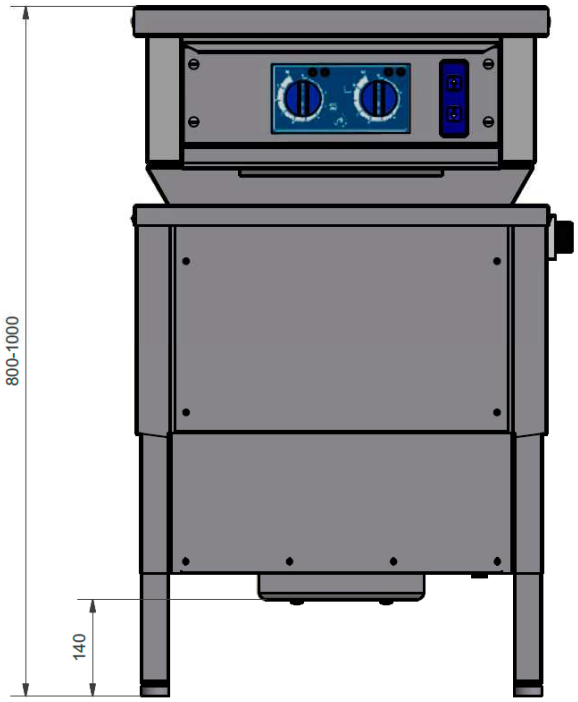

For usage and service purposes a 830 mm minimum clearance is required at the front of the range

For safety purposes there should be a 50 mm minimum clearance between the range sides/rear and other interior such as walls, tables, machines etc.

We reserve our right to technical alterations with reservations against misprints.

Jøni A/S · C.F. Tietgens Boulevard 28 DK-5220 Odense SØ · Phone +45 65 97 48 15 · Fax +45 65 97 57 47

Technical data for IN 830

Dimensions for IN 834R with heigh adjustable stand

Dokument nr. 100000024748-000-01 EN Side 8/156

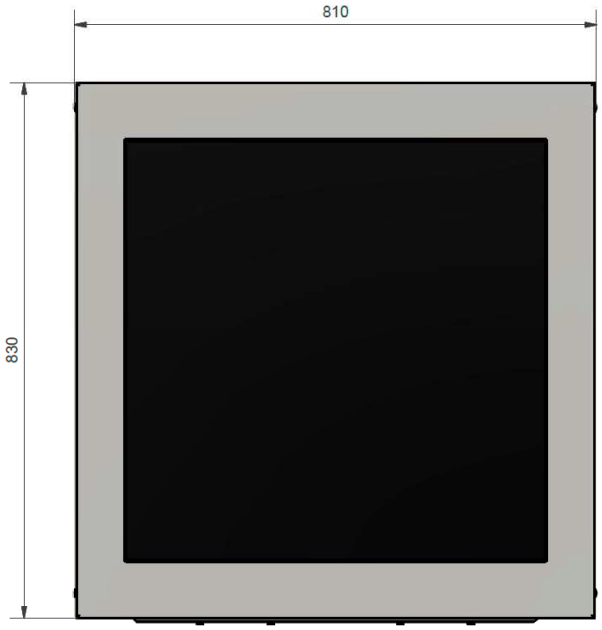

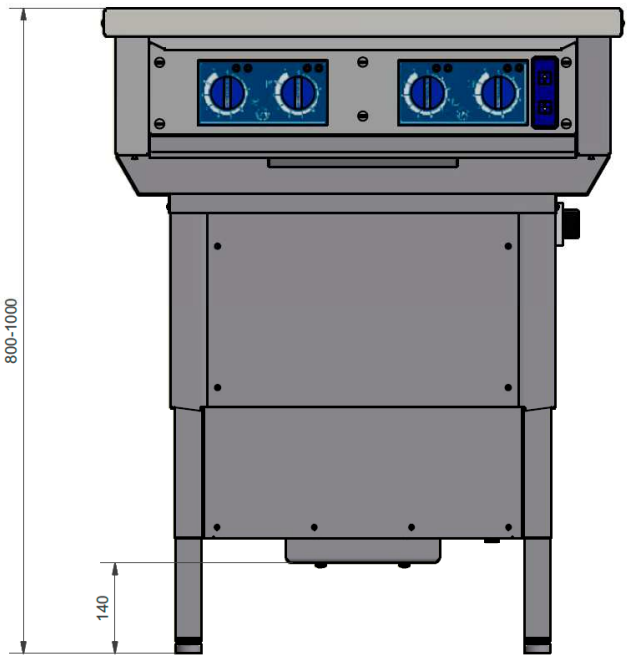

For usage and service purposes a 830 mm minimum clearance is required at the front of the range

For safety purposes there should be a 50 mm minimum clearance between the range sides/rear and other interior such as walls, tables, machines etc.

We reserve our right to technical alterations with reservations against misprints.

Jøni A/S · C.F. Tietgens Boulevard 28 DK-5220 Odense SØ · Phone +45 65 97 48 15 · Fax +45 65 97 57 47

Technical data for IN 830

Dimensions for IN 836R with heigh adjustable stand

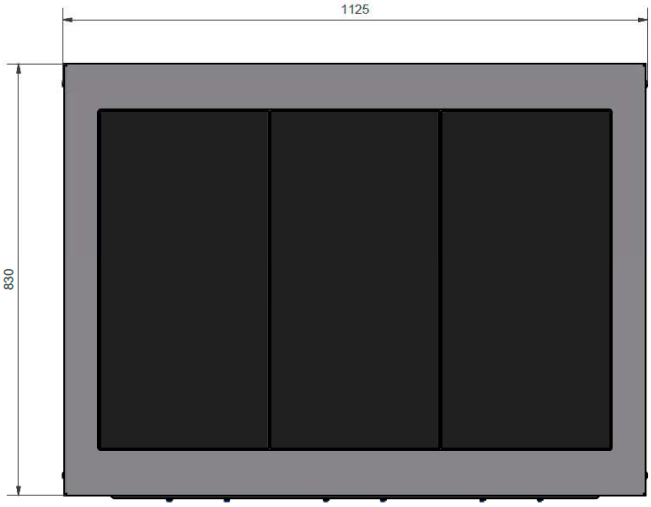

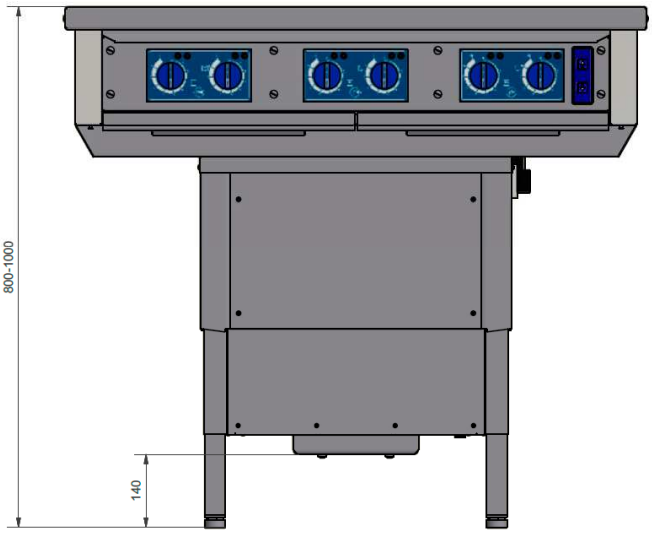

For usage and service purposes a 830 mm minimum clearance is required at the front of the range

For safety purposes there should be a 50 mm minimum clearance between the range sides/rear and other interior such as walls, tables, machines etc.

We reserve our right to technical alterations with reservations against misprints.

Jøni A/S · C.F. Tietgens Boulevard 28 DK-5220 Odense SØ · Phone +45 65 97 48 15 · Fax +45 65 97 57 47

Technical data for
IN 830

Shelf

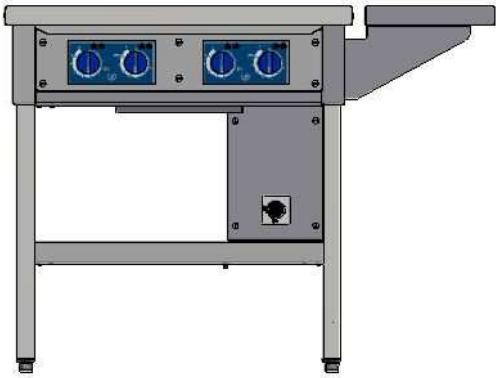

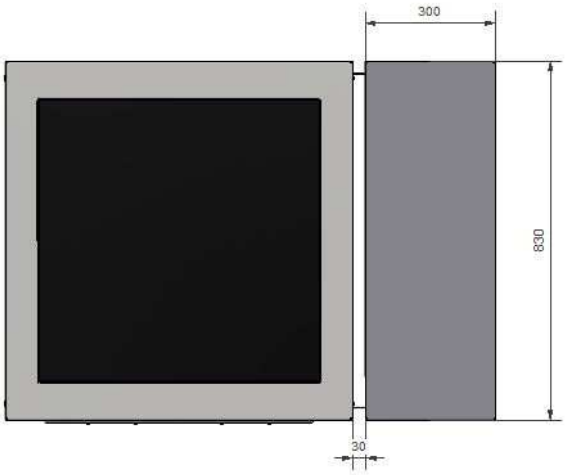

IN 832 with a shelf on legs or as a table top model has to be mounted to the floor by special adjustable feet. .

Adjustable foot with a hole for floor mounting

We reserve our right to technical alterations with reservations against misprints.

Jøni A/S · C.F. Tietgens Boulevard 28 DK-5220 Odense SØ · Phone +45 65 97 48 15 · Fax +45 65 97 57 47

Technical data for IN 830

Hand rail

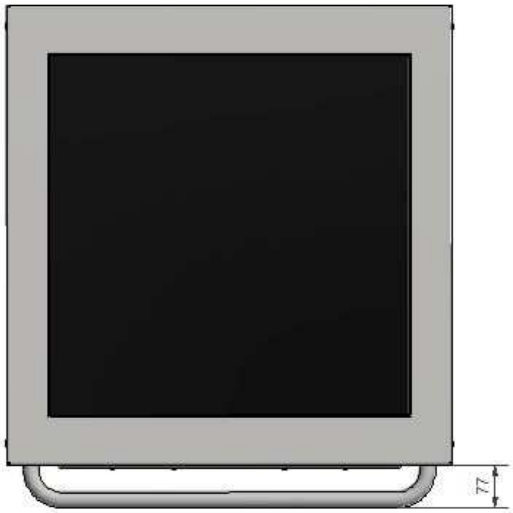

Sea rail

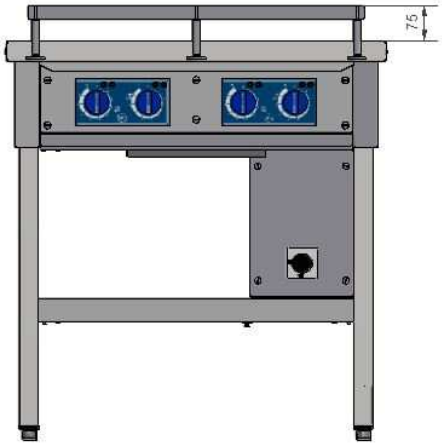

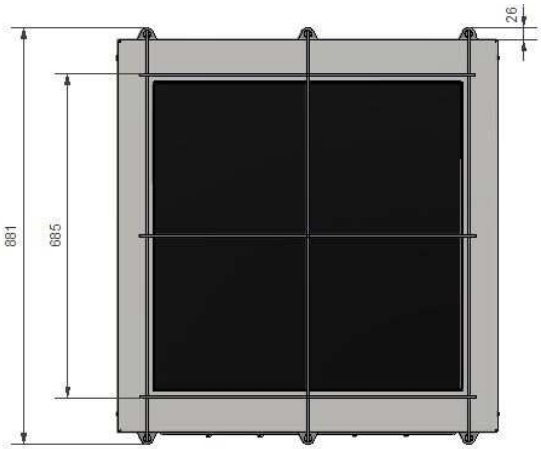

We reserve our right to technical alterations with reservations against misprints.

Jøni A/S · C.F. Tietgens Boulevard 28 DK-5220 Odense SØ · Phone +45 65 97 48 15 · Fax +45 65 97 57 47

Technical data for IN 830

Installation data IN 832 on four legs

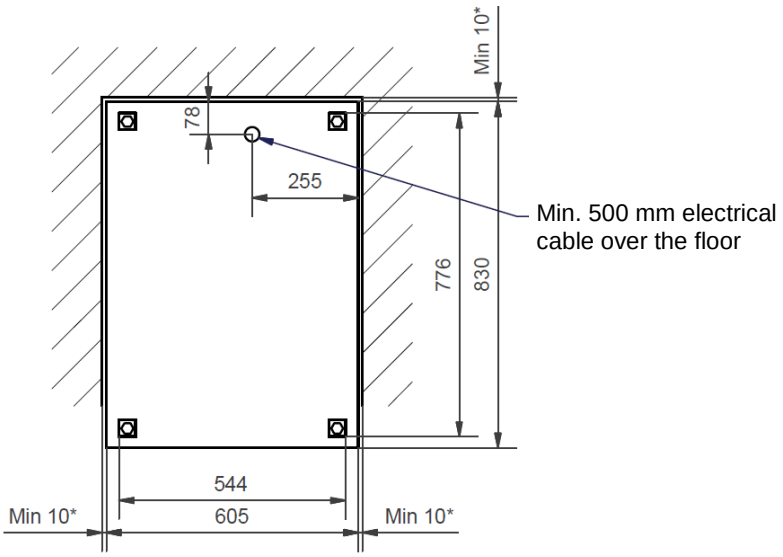

Installation data IN 834 on four legs

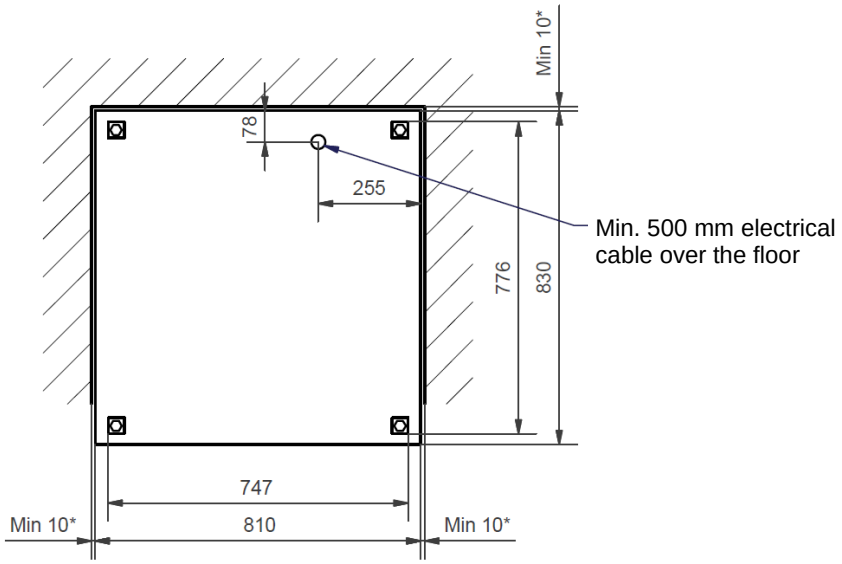

*But min. 100 mm when placed nexed to inflammable materials.

We reserve our right to technical alterations with reservations against misprints.

Jøni A/S · C.F. Tietgens Boulevard 28 DK-5220 Odense SØ · Phone +45 65 97 48 15 · Fax +45 65 97 57 47

Technical data for IN 830

Dokument nr. 100000024748-000-01 EN Side 13/16

Installation data IN 832 on four legs

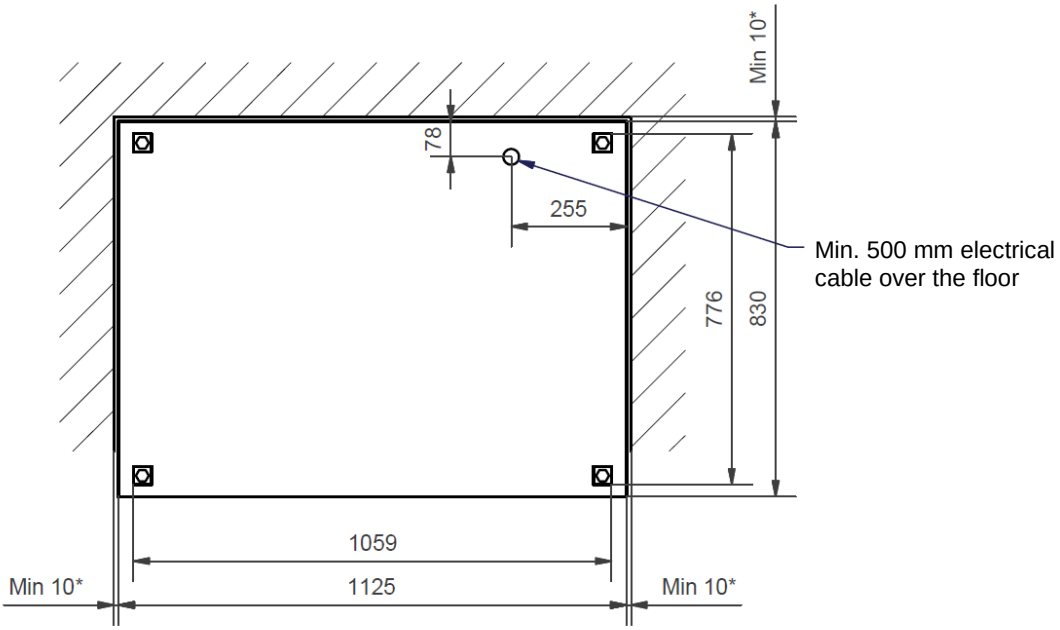

*But min. 100 mm when placed nexed to inflammable materials.

We reserve our right to technical alterations with reservations against misprints.

Jøni A/S · C.F. Tietgens Boulevard 28 DK-5220 Odense SØ · Phone +45 65 97 48 15 · Fax +45 65 97 57 47

Technical data for IN 830

Installation data for IN 832 on a height adjustable stand

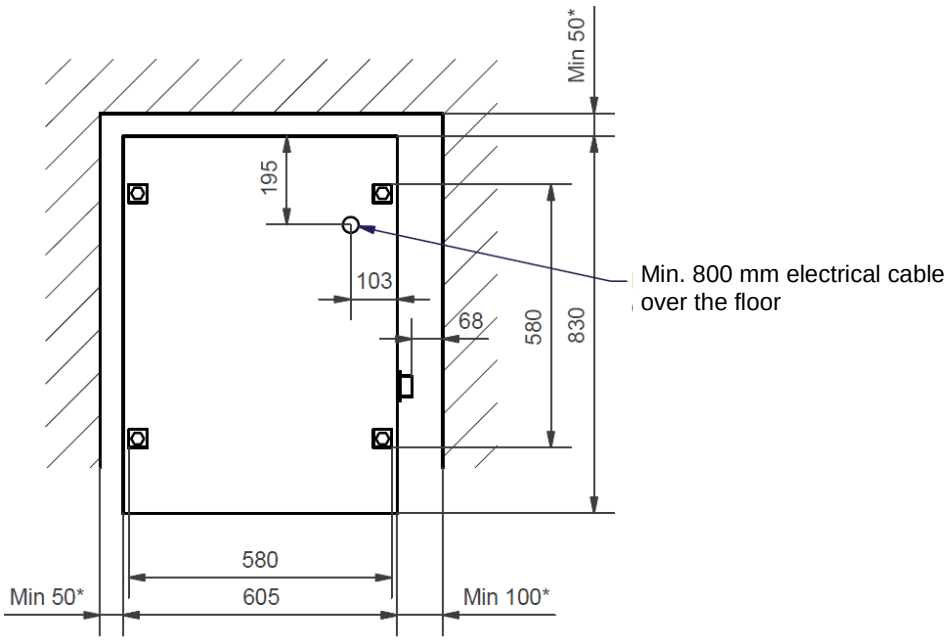

Installation data for IN 834 on a height adjustable stand

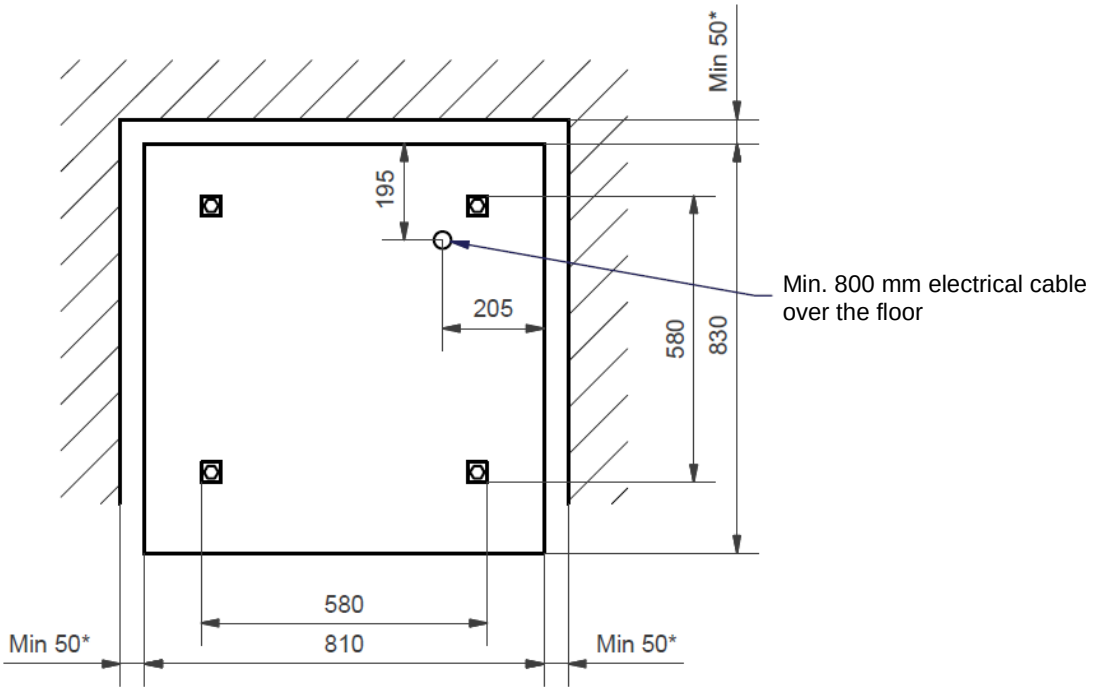

*But min. 100 mm when placed nexed to inflammable materials.

Jøni A/S · C.F. Tietgens Boulevard 28 DK-5220 Odense SØ · Phone +45 65 97 48 15 · Fax +45 65 97 57 47

Technical data for IN 830

Dokument nr. 100000024748-000-01 EN Side 15/16

Installation data for IN 836 on a height adjustable stand

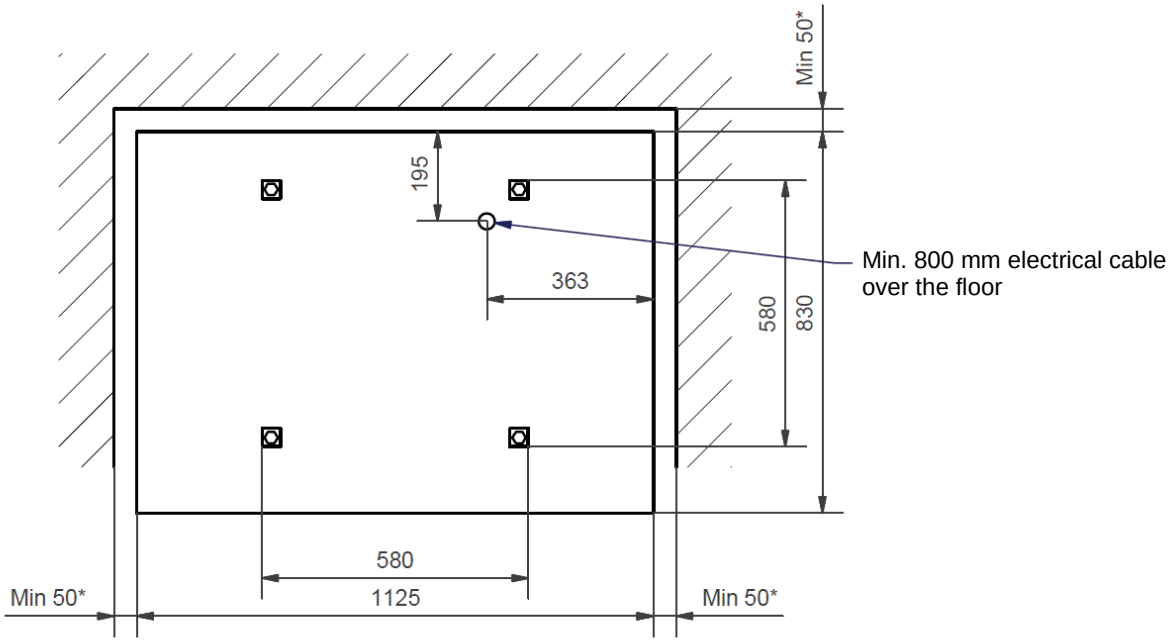

*But min. 100 mm when placed nexed to inflammable materials.

Jøni A/S · C.F. Tietgens Boulevard 28 DK-5220 Odense SØ · Phone +45 65 97 48 15 · Fax +45 65 97 57 47

Dokument nr. 100000024748-000-01 EN Side 16/156

Electrical supply of IN 830

When connecting the cooking range pay attention to the type of supplying network as the cooking range have quite some leak-current to ground.

Laek current:

Model	IN 832R	IN 834R	IN 836R
mA	≤30	≤30	≤60

Protection against in-direct touching of live parts must be placed up-stream the appliance by and checked of the electrician.
Please note that IEC 60364-7-707 *Particular reliable ground conductors* due to the high leak current must be met.

Installation at TN-net:

Neutral earthing is recommend. If a residual current device (earth leakage breaker) is wanted, the recommendations for TT-network apply

Installation at TT-net:

An earth leakage breaker with a trip current of 100mA can be used.
Due to 3-phase rectifiers the earth leakage breaker **must** be a class B type

Installation at IT-net:

On IT-networks, appliances having a leak current can usually not be accepted. However, it depends on the isolation monitoring equipment in the installation. Some brands can distinguish between leak current and fault current and some cannot.
There are two ways of using a cooking range on an IT-network:
Use isolation monitoring equipment which can handle the leak current. I.e. Bender type: A-ISOmeter or supply the appliance via an isolating transformer

In all cases the end-user must be consulted to find a solution for the leak current

For more information please refer to the user manual for the appliance.

We reserve our right to technical alterations with reservations against misprints.

Jøni A/S · C.F. Tietgens Boulevard 28 DK-5220 Odense SØ · Phone +45 65 97 48 15 · Fax +45 65 97 57 47